DRAWING NO: 2-V-4M52-20305

ALL DIMENSIONS ARE IN MILLIMETRES. FOR TOLERANCES OF UNTOLERANCED DIMENSIONS DURING MANUFACTURE REFER RELEVANT QCP / QP

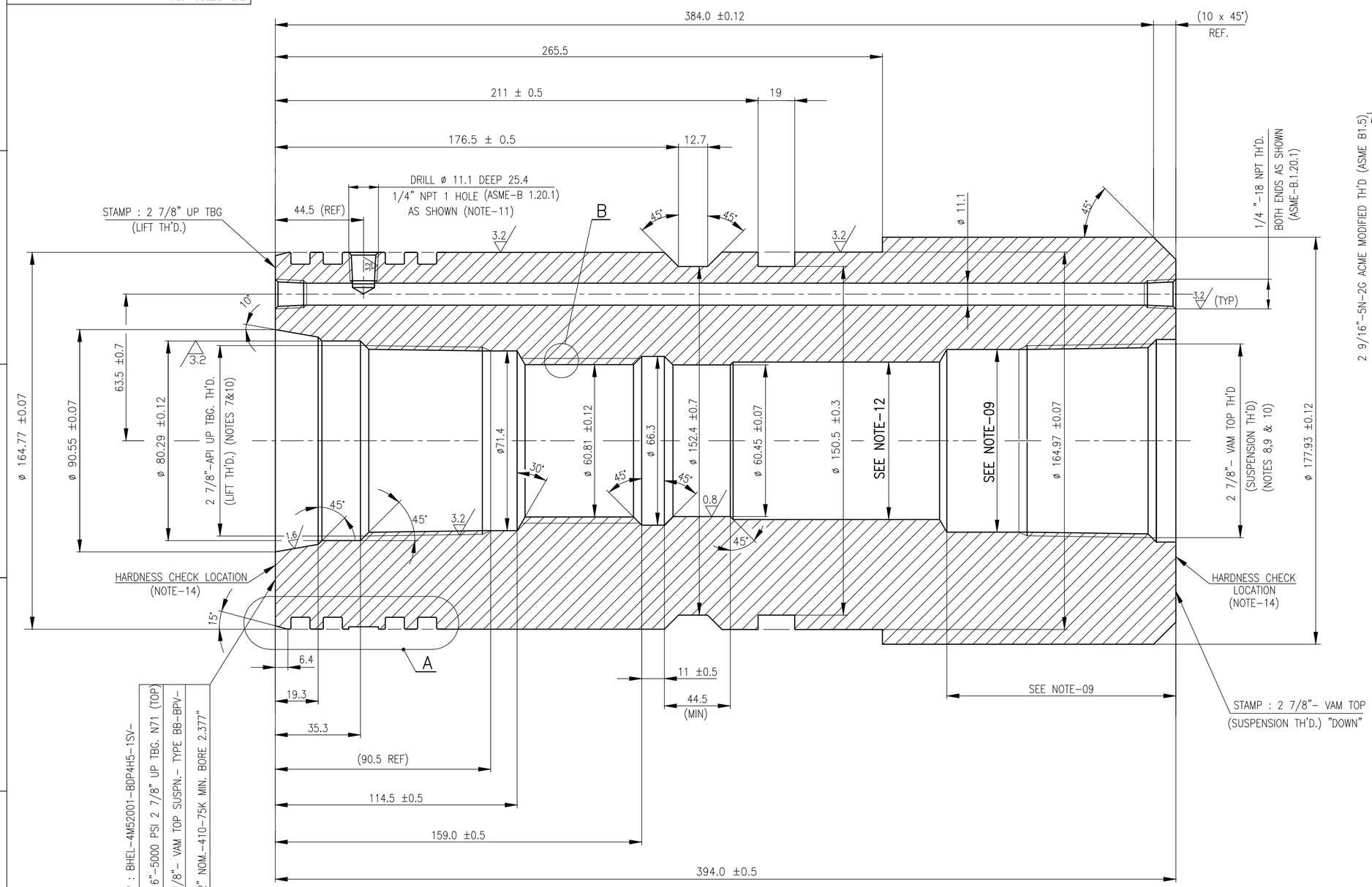

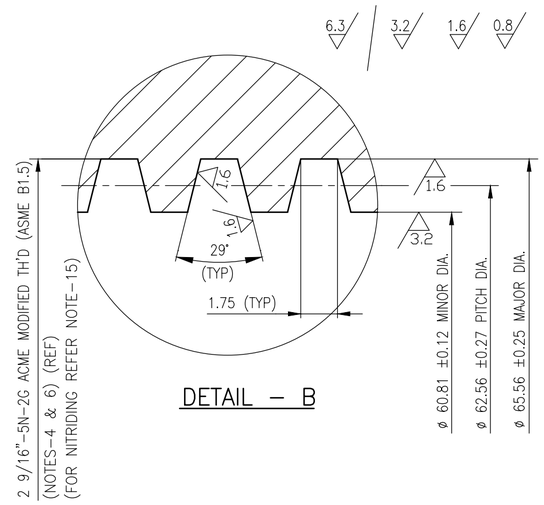

DETAIL – B

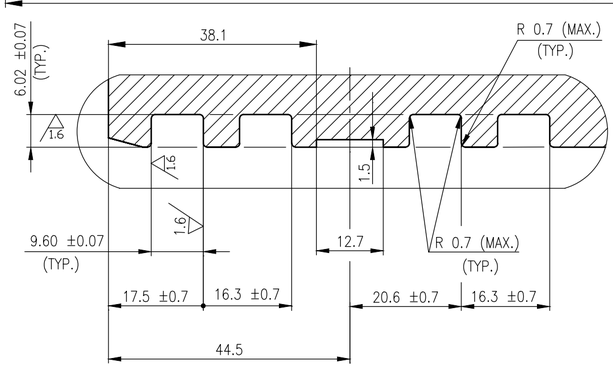

DETAIL–A
(4 GROOVES)

NOTES

1. MATERIAL SHALL COMPLY WITH REQUIREMENTS OF LATEST APPLICABLE QUALITY PROCEDURE FOR PRESSURE RETAINING PARTS TO PSL-1 REQUIREMENT.
2. UNSPECIFIED MACHINING TOLERANCE ±0.25.
3. UNSPECIFIED ANGLE TOLERANCE ±1/2°
4. LIFT THIN SECTION OF ACME THREAD TO FULL THREAD WIDTH BOTH ENDS.
5. COAT : INDOOR RUST PREVENTIVE COATING.
6. ACME THREADS MUST BE FREE OF RAG & BURRS. BREAK CREST R0.13 TO R0.25
7. THREAD MACHINING & GAUGING AS PER API-5B.
8. COAT THE VAM TOP SUSPENSION THREAD AS PER THREAD LICENSEE INSTRUCTIONS.
9. THREAD LENGTH, COUNTER BORE, THREAD RELIEF DIA, FINISH ETC. TO SUIT THE 2 7/8" VAM TOP THREAD.
10. USE MASTER GAUGES FOR RESPECTIVE THREAD GAUGING.
11. DRILLED HOLES MUST INTERSECT, CHECK AFTER DRILLING.
12. ID TO MATCH WITH THE INDICATED PPF VALUE TO ENSURE METAL TO METAL NOSE SEAL.
13. PROTECT THE THREADS DURING TRANSIT.
14. CHECK AND PUNCH ACTUAL HARDNESS VALUE.
15. AFTER MACHINING, NITRIDE THE BPV THREADS AS PER APPLICABLE QUALITY PROCEDURE. AFTER NITRIDING, THREADS MUST BE CLEANED IN ORDER TO REMOVE GRIT, SCALE AND SALT.

PSL	1
TEMP. RATING	P,U
MATL. CLASS	FF

100% HARDNESS CHECK
(WILL HAVE TO BE CARRIED OUT ON ALL PARTS)

No OFF	DESCRIPTION	MATL CODE	MATL SPECN	HEAT TREATMENT	SCRAP SORT	NET WT (kg)	GROSS WT (kg)	DRAWING No	ITEM No
—	–	974650410000	AISI-410-75K PRODUCT ATTEST	H & T	46	58	–	–	001

UNLESS OTHERWISE SPECIFIED

BREAK SHARP CORNERS	: 0.25
FILLET RADII	: 0.76±0.12
CONCENTRICITY	: 0.25 FIM
SQUARENESS	: 0.25 IN 254
PARALLELISM	: 0.25 IN 254

RFS EXCEPT WHEN (M) MODIFIED

DCP No.	ALTD:	APPD:
	CHD:	DT:
REV		
ZONE		

CAUTION: The information on this document is the property of BHARAT HEAVY ELECTRICALS LTD. It must not be used directly or indirectly in any way detrimental to the interest of the company.

TYPE OF PRODUCT OR NAME OF CUSTOMER/PROJECT: 7 1/16"-5000 PSI – BDP4H5-1SV WITH N71 POCKET 2 7/8" UP TBG. LIFT x 2 7/8" VAM TOP SUSPENSION

BHARAT HEAVY ELECTRICALS LTD.,
UNIT: HIGH PRESSURE BOILER PLANT.
TIRUCHIRAPALLI-620014.
365-120

	NAME	SIGN	DATE	NO.OF VAR.
DRN	D.LOGESH KUMAR		07.04.18	–
CHD	ARUNKUMAR P		07.04.18	
APPD	ELAYARAJA R		07.04.18	

DEPT	SCALE	WEIGHT (KG).	REFERENCE INFORMATIONS	NO. OF ITEMS
V L	NTS	–	–	–
CODE 340				

TITLE: TUBING HANGER-BODY

CARD CODE: U 01

DRAWING NO.: 2-V-4M52-20305

REV: 00

Size A2